Qualified for Automotive Applications
Wide Input Voltage Range: 3.2V-50V
Low Shutdown Current 3.7uA
Low Quiescent operating Current: 450uA
Adjustable Switching Frequency: 100KHz to 2.2MHz
Integrated Frequency Dithering for EMI Mitigation
External Frequency Synchronic
External Compensation
Supports additional Slope Compensation
22ms Internal Soft-start Time
Integrated Protection Feature

- Constant Peak-Current Protection Threshold Over Input Voltage
- Output Overvoltage Protection
- Adjust Under-Voltage Lockout
- Optional Hiccup Over Load Protection
- Thermal Shutdown Protection:165°C

MSOP-8L(3mm*3mm) Package

Muti-output Flyback
LED Bias Supply
Portable Speaker Supply
Battery Powered Boost/Flyback/SEPIC application

The SCT81620 device is a wide input, non-synchronous boost controller. The Device can be used in Boost, SEPIC and Flyback converters and topologies.

The switching frequency of the SCT81620 device can be adjusted to any value between 100kHz and 2.2MHz by using a single external resistor or by synchronizing it to an external clock. Current mode control provides superior bandwidth and transient response in addition to cycle-by-cycle current limiting.

 © 2023 Silicon Content Technology Co., Ltd. All Rights Reserved 

Over operating free-air temperature range unless otherwise noted

| PARAMETER | DEFINITION | MIN | MAX | UNIT |
|---|---|---|---|---|
| $V_{IN}$ | Input voltage range | 3.2 | 50 | V |
| $V_{CC}$ | VCC voltage range | 3.2 | 6.1 | V |
| $T_J$ | Operating junction temperature | -40 | 125 | °C |

| PARAMETER | DEFINITION | MIN | MAX | UNIT |
|---|---|---|---|---|
| $V_{ESD}$ | Human Body Model(HBM), per ANSI-JEDEC-JS-001-2014 specification, all pins | -2 | +2 | kV |
| | Charged Device Model(CDM), per ANSI-JEDEC-JS-002-2014specification, all pins | -1 | +1 | kV |

| PARAMETER | THERMAL METRIC | MSOP-8 | UNIT |
|---|---|---|---|
| R | Junction to ambient thermal resistance(1) | 132.8 | °C/W |

 © 2023 Silicon Content Technology Co., Ltd. All Rights Reserved 

| SYMBOL | PARAMETER | TEST CONDITION | MIN | TYP | MAX | UNIT |
|---|---|---|---|---|---|---|
| $t_{ON_MIN}$ | Minimum on-time | Fsw=400kHz | | 250 | | ns |

**Protection**

V

 © 2023 Silicon Content Technology Co., Ltd. All Rights Reserved 

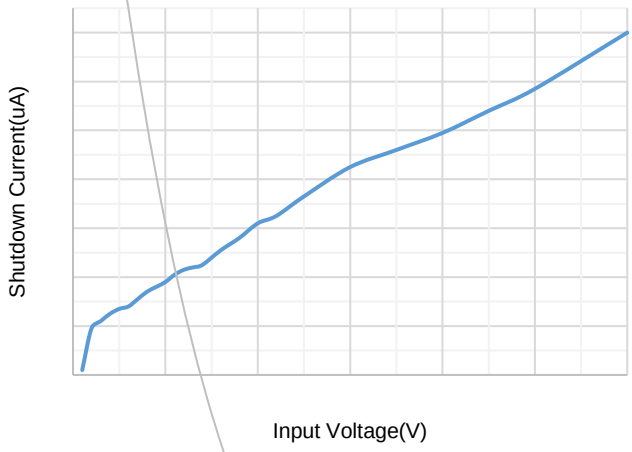


Figure 1. ISD vs Input Voltage

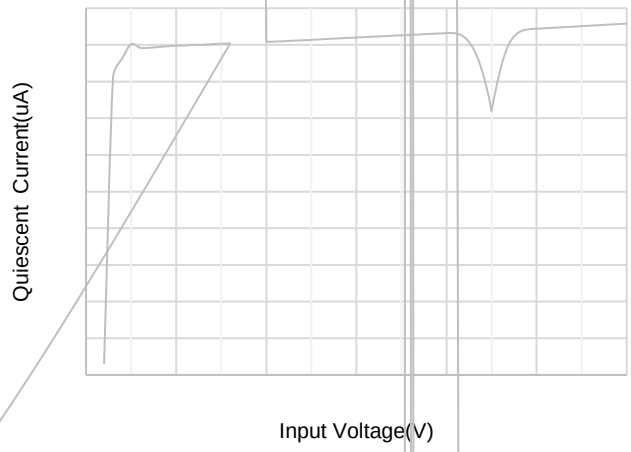


Figure 2. IQ vs Input Voltage

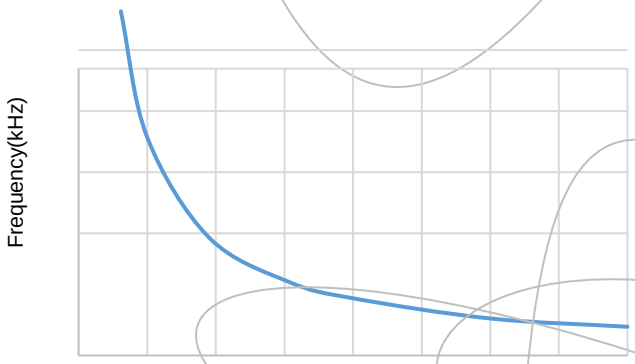


Figure 3. Switching Frequency vs RT

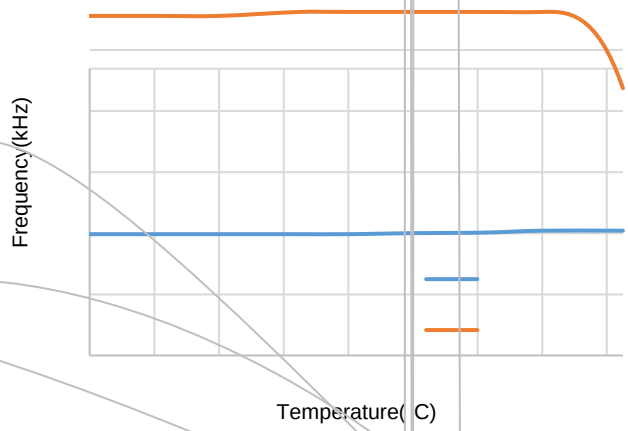


Figure 4. Switching Frequency vs Temperature

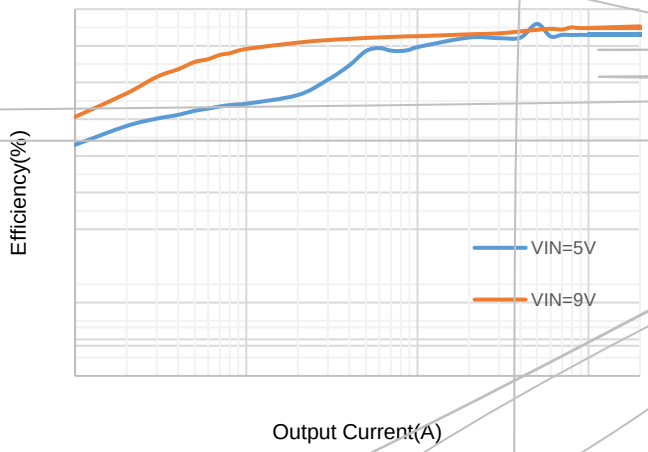


Figure 5. Efficiency vs Load Current, Boost, VOUT=12V

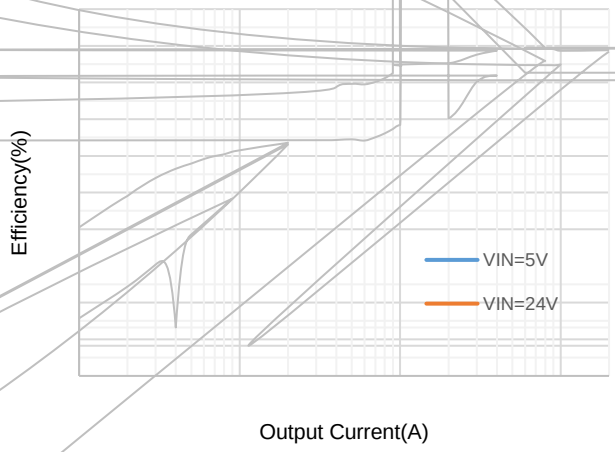


Figure 6. Efficiency vs Load Current, Sepic, VOUT=12V

 © 2023 Silicon Content Technology Co., Ltd. All Rights Reserved

Figure 7. VSENSN vs Input Voltage

Figure 8. DR Volage vs Input Voltage

Figure 9. COMP Current vs Temperature

Figure 10. DR Resistance vs Temperature

 © 2023 Silicon Content Technology Co., Ltd. All Rights Reserved 

## Overview

 © 2023 Silicon Content Technology Co., Ltd. All Rights Reserved 

$$V_{samp} \quad I_L * R_{SEN} \tag{1}$$

 © 2023 Silicon Content Technology Co., Ltd. All Rights Reserved

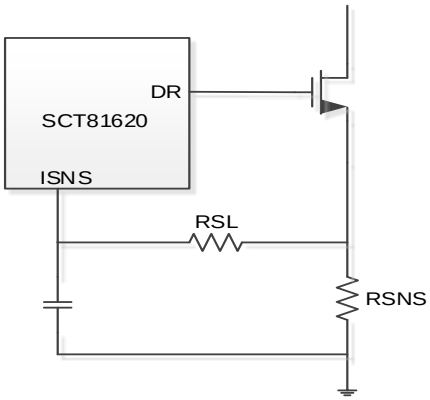


Figure13 .External RSL to increase slope compensation

**Adjustable Peak Current Limit**

 © 2023 Silicon Content Technology Co., Ltd. All Rights Reserved 

**Output Voltage**

$$R_{FBT} \quad \frac{V_{OUT} \quad V_{REF}}{V_{REF}} \quad R_{FBB} \tag{12}$$

where:

 © 2023 Silicon Content Technology Co., Ltd. All Rights Reserved

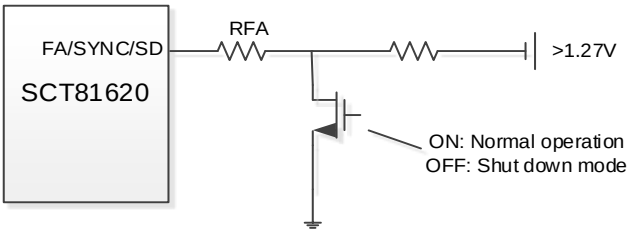


Figure17. Shutdown operation in Frequency Adjust Mode

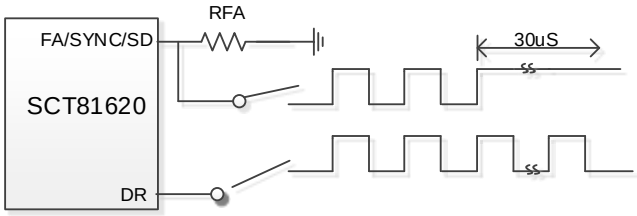


Figure18. Shutdown operation in Frequency Synchronization Mode

 © 2023 Silicon Content Technology Co., Ltd. All Rights Reserved 

### Typical Application (Boost)

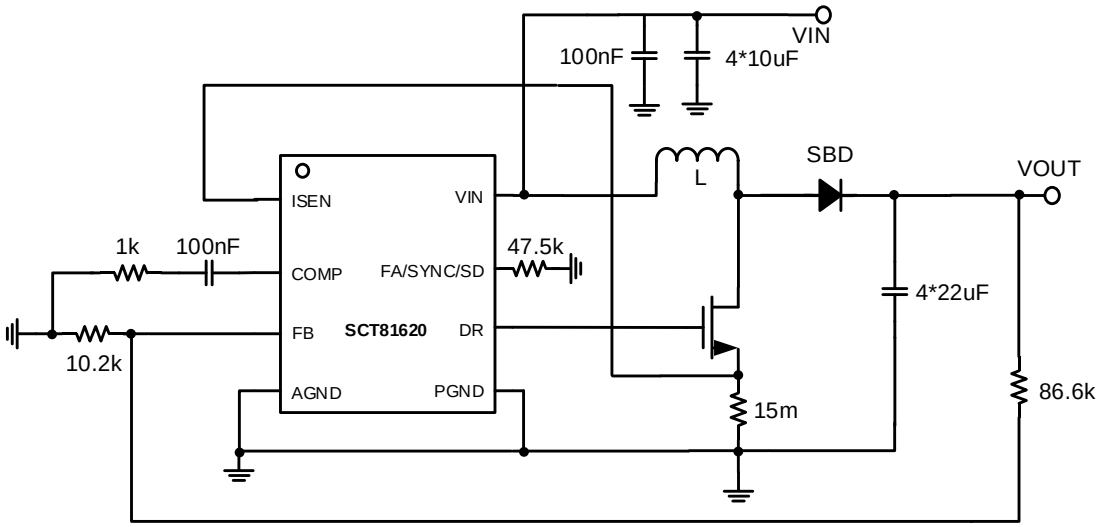


Figure 19. Application Schematic, 3V to 11V, 2A Boost Regulator at 400kHz

**Design Parameters**

| Design Parameters | Example Value |
|---|---|
| Input Voltage | 5V Normal 3V to 11V |
| Output Voltage | 12V |
| Maximum Output Current | 3A |
| Switching Frequency | 400 |

 © 2023 Silicon Content Technology Co., Ltd. All Rights Reserved

 © 2023 Silicon Content Technology Co., Ltd. All Rights Reserved

Where

$I_G$ is the gate drive current.

**Output Diode Selection**

$$I_{D(PEAK)} \quad \frac{I_{OUT}}{(1 \quad D)} \quad I_L \tag{24}$$

 © 2023 Silicon Content Technology Co., Ltd. All Rights Reserved 

**Application Waveforms**

Vin=5V, Vout=12V, unless otherwise noted

Figure 20. Power up(Iload=2A)

Figure 21. Power down(Iload=2A)

Figure 22. Over current protection (Iload=5A)

Figure 23. Over

 © 2023 Silicon Content Technology Co., Ltd. All Rights Reserved

**Typical Application (Sepic)**

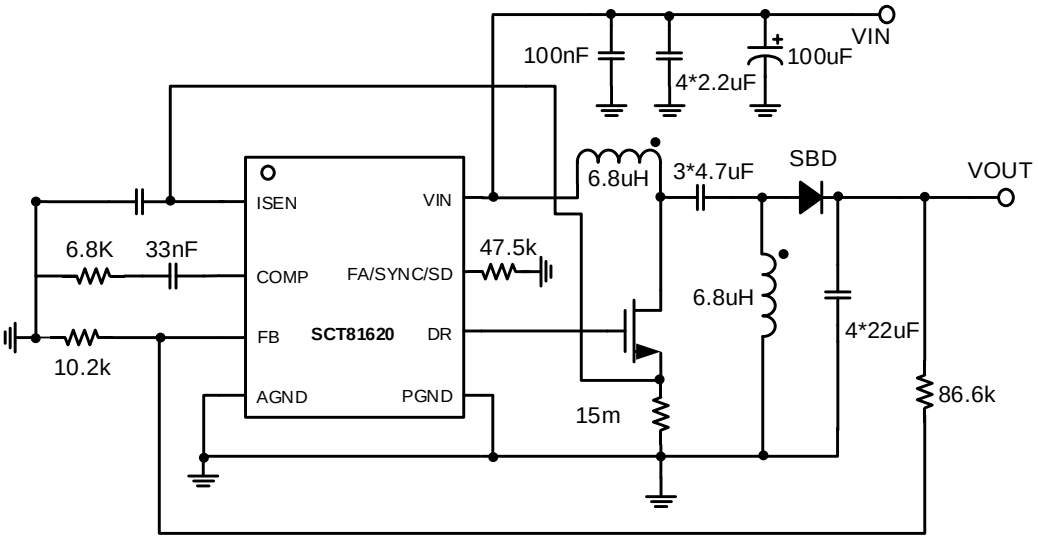


Figure 26. Application Schematic, 5V to 50V, 2A Sepic Regulator at 400kHz

**Design Parameters**

**Design Parameters**

 © 2023 Silicon Content Technology Co., Ltd. All Rights Reserved 

**Inductor Selection (Sepic)**

$$I_{L1} \quad I_{IN} \quad 40\% = I_O \quad \frac{V_O}{V_{IN_MIN}} \quad 40\% \tag{25}$$

(26)

(27)

$f_{SW}$ is the switching frequency.

$$I_{L1_PEAK} \quad I_{IN} \quad \frac{I_L}{2} \quad I_O \quad \frac{V_O}{V_{IN_MIN}} \quad (1 \quad \frac{40\%}{2}) \tag{28}$$

$$I_{L2_PEAK} \quad I_O \quad \frac{I_L}{2} \quad I_O \quad (1 \quad \frac{40\%}{2}) \tag{29}$$

$$L_1 \quad L_2 \quad \frac{L}{2} = \frac{V_{IN_MIN}}{2 \quad I_L \quad f_{SW}} \quad D_{MAX} \tag{30}$$

**Power MOSFET Selection**

$$V_{SW_PEAK} \quad V_{IN} \quad V_O \quad V_D \tag{31}$$

$$I_{Q_PEAK} \quad I_{L1_PEAK} \quad I_{L2_PEAK} \tag{32}$$

$$I_{Q_RMS} \quad I_O \quad \sqrt{\frac{V_O \quad V_{IN_MIN} \quad V_D \quad V_O \quad V_D}{V_{IN_MIN}^2}} \tag{33}$$

$$P_{DIS} \quad I_{Q_RMS}^2 \quad R_{DS_ON} \quad D_{MAX} \quad V_O \quad V_{IN_MIN} \quad I_{Q_PEAK} \quad \frac{Q_g \quad f_{SW}}{I_G} \tag{34}$$

*$I_G$ is the gate drive current.*

 © 2023 Silicon Content Technology Co., Ltd. All Rights Reserved

### Output Diode Selection

$$V_{D_PEAK} \quad V_{IN_MAX} \quad V_{O_MAX} \tag{35}$$

### Coupling Capacitor Selection

$$V_{CS} \quad \frac{I_O \quad D_{MAX}}{C_S \quad f_{SW}} \tag{36}$$

$$_{CS_RMS} \quad _{O} \sqrt{\frac{_{O} \quad _{D}}{_{IN_MIN}}} \tag{37}$$

 © 2023 Silicon Content Technology Co., Ltd. All Rights Reserved 

 © 2023 Silicon Content Technology Co., Ltd. All Rights Reserved

## Application Waveforms

Vin=5V, Vout=12V, unless otherwise noted

Figure 28. Power up(Iload=2A)

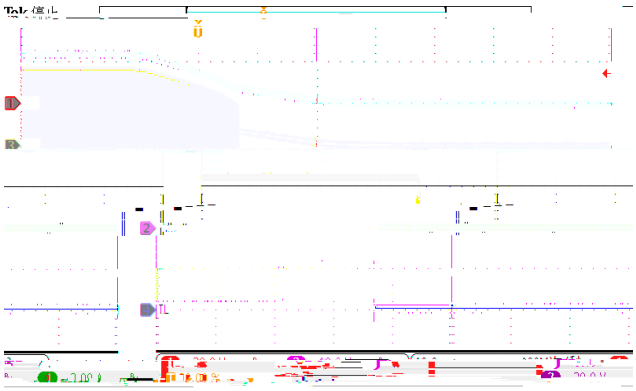

Figure 29. Power down(Iload=2A)

Figure 30. Shutdown remove

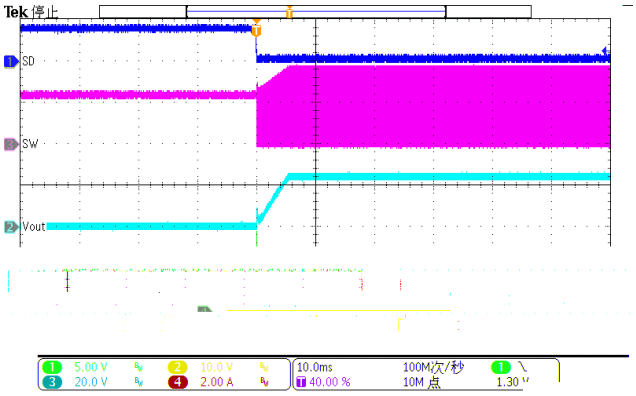


Figure 31. Shutdown remove

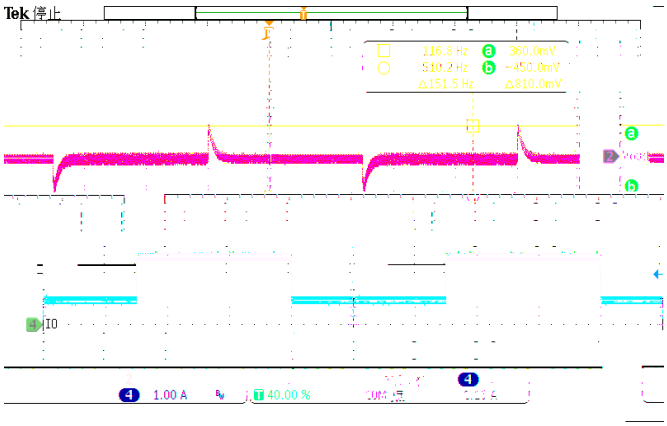


Figure 32. LoadTrans (Iload=0.5A-1.5A)

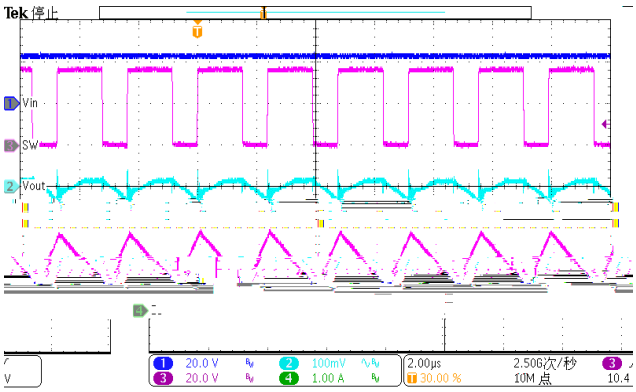


Figure 33. steady-state (Iload=2A)

 © 2023 Silicon Content Technology Co., Ltd. All Rights Reserved 

**Layout Guideline**

Figure 34. BOOST PCB Layout

 © 2023 Silicon Content Technology Co., Ltd. All Rights Reserved

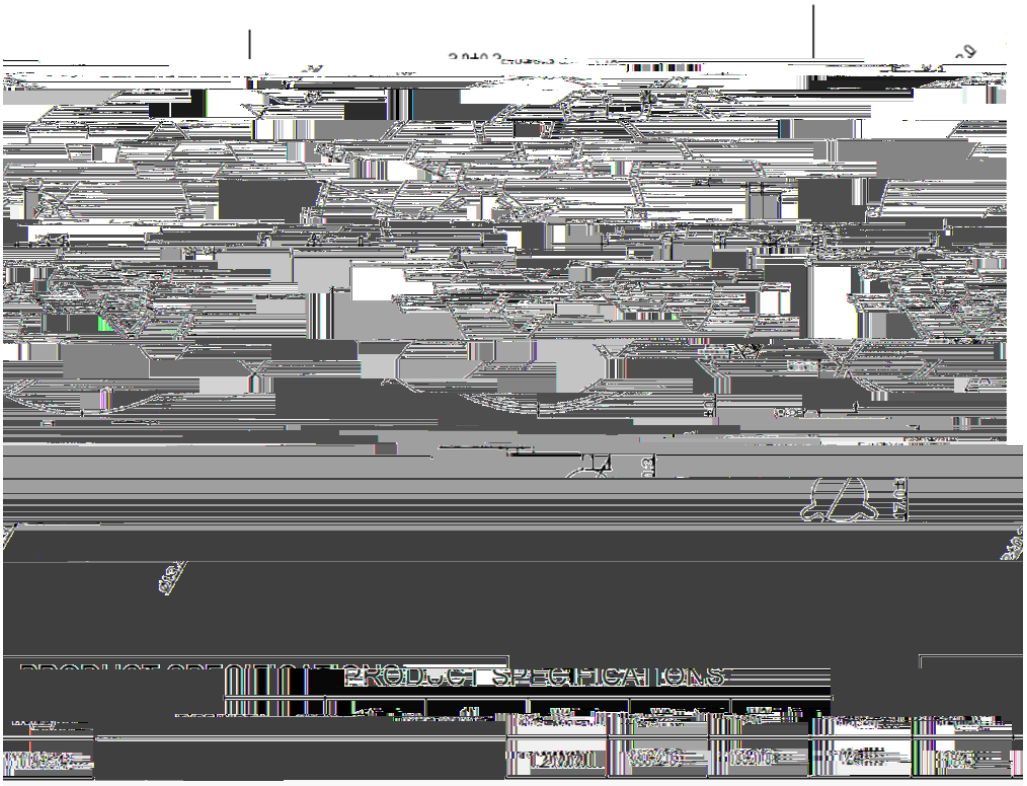

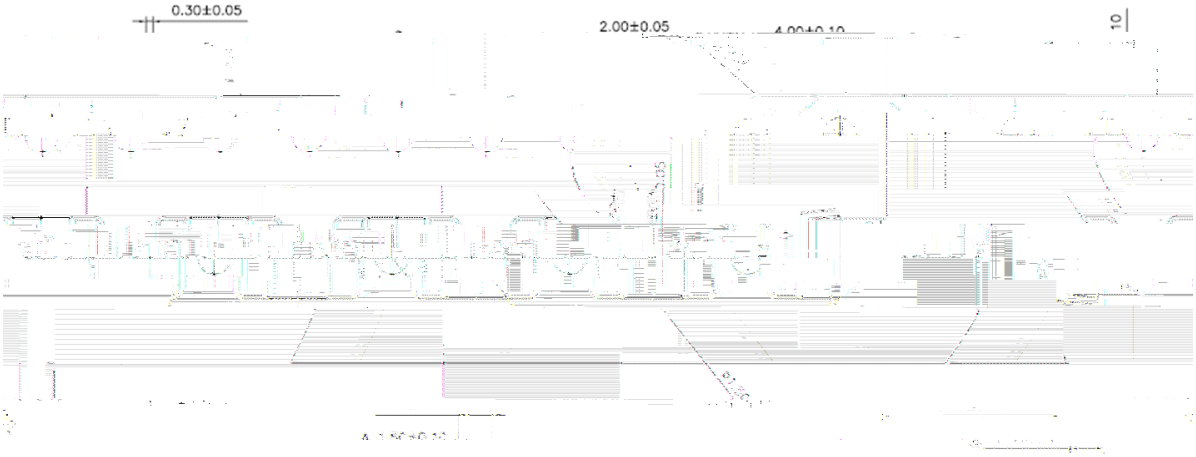

**NOTICE:** The information in this document is subject to change without notice. Users should warrant and guarantee the third party Intellectual Property rights are not infringed upon when integrating Silicon Content Technology (SCT) products into any application. SCT will not assume any legal responsibility for any said applications.

 © 2023 Silicon Content Technology Co., Ltd. All Rights Reserved