REVISION HISTORY

		[redacted]		
Current Limit				
Switching Frequency				
Soft Start Time				
Protection				

TYPICAL CHARACTERISTICS

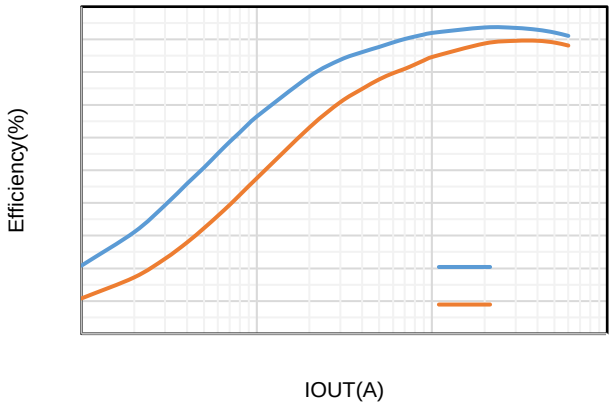

FUNCTIONAL BLOCK DIAGRAM

Oscillator
with PLL

SCT

Thermal Shutdown

APPLICATION INFORMATION

Typical Application

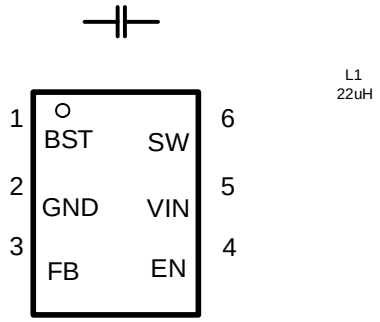

Figure 16. 24V Input, 5V/0.6A Output

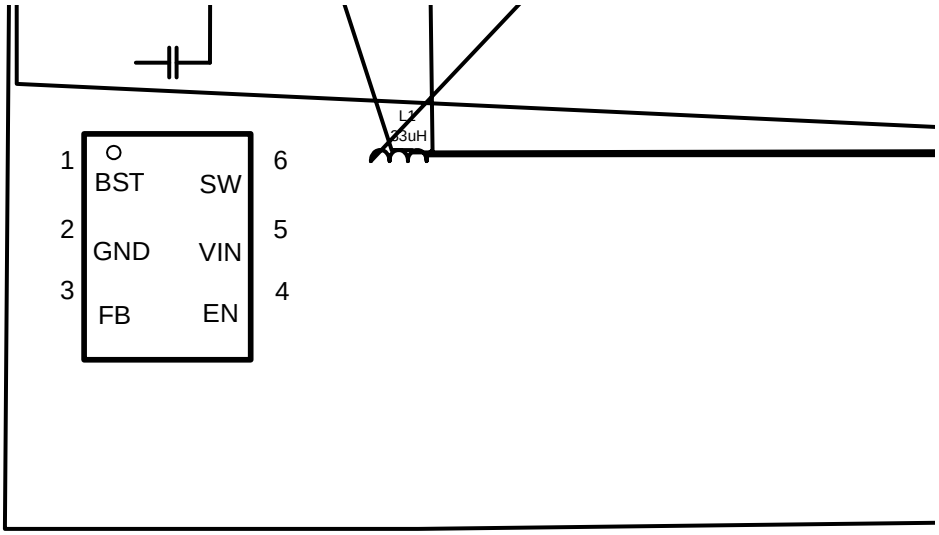

Figure 17. 24V Input, 12V/0.6A Output

Design Parameters

Design Parameters	Example Value
Input Voltage	24V
Output Current	0.6A
Switching Frequency	1.2MHz
Start Input Voltage (rising VIN)	5.5V
Stop Input Voltage (falling VIN)	5V

Output Voltage

Table 1. R_1, R_2Value for Common Output Voltage
(Room Temperature)

V_{OUT}	R_1	R_2

Application Waveforms

Layout Guideline

1.

2.

PACKAGE INFORMATION

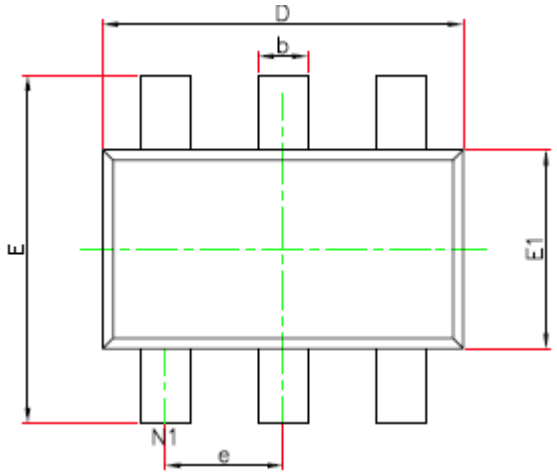

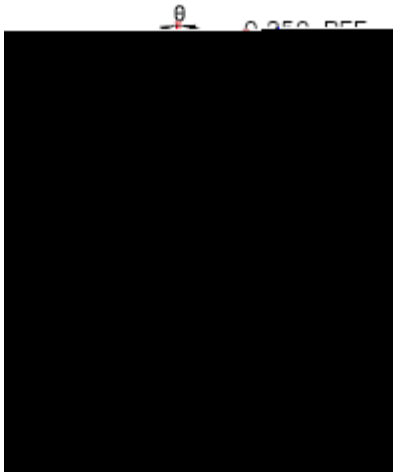

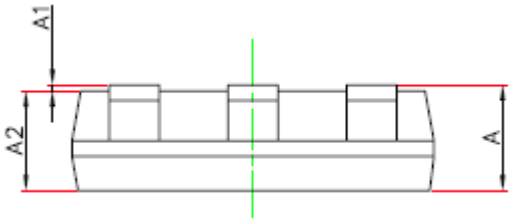

SYMBOL	Unit: Millimeter		
	MIN	TYP	MAX
	o		o

NOTE:

1.

2.

3.

4.

5.

6.